Electrolux PROFESSIONAL

High Productivity Cooking Touchline tilting kettle, gas (88712 BTU), 40 gal (150 lt) with 2" TDO valve

ITEM #

MODEL #

NAME #

SIS #

AIA #



587041 (PBOT15GDWF)	Touchline Tilting Kettle, gas, 40 gallon (150 Lt) capacity, stainless steel construction, full jacket, safety valve, safety thermostat, motor assisted tilt, 2" tangent draw-off valve, 88712 BTU

Short Form Specification

Item No.

Touchline Tilting Kettle, gas, 40 gallon (150 Lt) capacity, stainless steel construction, full jacket, safety valve, safety thermostat, motor assisted tilt, 2" tangent draw-off valve, 88712 BTU

Main Features

- Kettle is suitable to boil, steam, poach, braise or simmer all kinds of produce.
- Kettle is jacketed up to 6" (159mm) from upper rim.
- Isolated upper well rim avoids risk of harm for the user.
- Ergonomic vessel dimensions, with a large diameter and shallow depth facilitates stirring and gentle food handling.
- Edge of the large pouring lip can be equipped with a strainer (option).
- Motorized, variable pan tilting with "SOFT STOP". Tilting and pouring speeds can be precisely adjusted. Pan can be tilted over 90° to facilitate pouring and cleaning operations.
- Built in temperature sensor to precisely control the cooking process.
- USB connection to easily update the software, upload/download recipes and download HACCP data.
- IPX6 water resistant.
- [NOT TRANSLATED]

Construction

- Cooking vessel in 1.4435 (AISI 316L) stainless steel featuring directional pouring lip. Double-jacket in 1.4404 (AISI 316L) stainless steel designed to operate at a pressure of 22 psi (1.5 bar).
- External panelling and internal frame made of 1.4301 (AISI 304) stainless steel.
- Double-lined insulated lid in 1.4301 (AISI 304) stainless steel mounted on the cross beam of the unit, counterbalanced by a hinge that remains open in all positions.
- 2" tangent draw-off valve.
- Safety valve avoids overpressure of the steam in the double jacket.
- Safety thermostat protects against low water level in the double jacket.
- Ergonomic and user friendly thanks to the high tilting position and the pouring lip design which allow to easily fill containers.
- Water mixing tap is available as optional accessory to make water filling and pan cleaning easier.
- Front-mounted inclined led "TOUCH" control panel with recessed deep drawn casing, features self-explanatory display functions which guide operator throughout the cooking process: simultaneous display of actual and set temperature as well as set cooking time and remaining cooking time; real time clock; "SOFT" control for gentle heating up for delicate food; 9 power simmering levels from gentle

APPROVAL:

Electrolux Professional, Inc.
www.electroluxprofessional.com
4003 Collins Lane Louisville, KY 40245 USA - fax number: 706-447-6228

Electrolux PROFESSIONAL
High Productivity Cooking Touchline tilting kettle, gas (88712 BTU), 40 gal (150 lt) with 2" TDO valve

to heavy boiling; timer for deferred start; error display for quick trouble-shooting.

- Minimised presence of narrow gaps for easier cleaning of the sides to meet the highest hygiene standards.
- Can be prearranged for energy optimisation or external surveillance systems (optional).
- Possibility to store recipes in single or multiphase cooking process, with different temperature settings.
- 98% recyclable by weight; packaging material free of toxic substances.
- [NOT TRANSLATED]
- [NOT TRANSLATED]

User Interface & Data Management

- Connectivity ready for real time access to connected appliances from remote and data monitoring (requires optional accessory – contact the Company for more details).

Included Accessories

• 1 of Food Tap Strainer Rod	PNC 910162
• 1 of Food Tap Strainer	PNC 911966
• 1 of 2" tangent draw-off valve for braising pans. Factory mounted only, increased lead time	PNC 913571

Optional Accessories

• Strainer for 40 gallon kettles	PNC 910004	❑
• Basket, for 40 gallon kettles	PNC 910024	❑
• Base plate, 40 gallon (150 liter) for kettles	PNC 910034	❑
• Food Tap Strainer Rod	PNC 910162	❑
• Left cover plate and mixing faucet for kettles (587041 and 587042)	PNC 911821	❑
• Food Tap Strainer	PNC 911966	❑
• Spray gun for tilting units, height 27-1/2 " (698.5mm) - factory fitted	PNC 912776	❑
• 4 flanged feet, 2", for prothermetic units (kettles, braising pans & pressure braising pans)	PNC 913438	❑
• Measuring rod for tilting kettle 40 gallon	PNC 913504	❑
• - NOT TRANSLATED -	PNC 913577	❑
• Spray gun kit for free-standing ProThermetic Tilting units H=700 - US - Field Mounted	PNC 913579	❑

High Productivity Cooking
Touchline tilting kettle, gas (88712 BTU), 40 gal (150 lt) with 2" TDO valve

Front

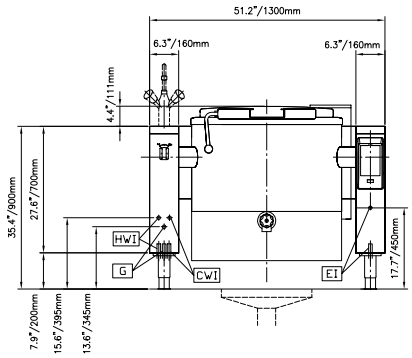

Side

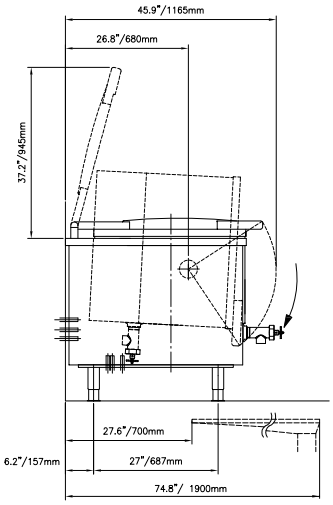

CWI1 = Cold Water inlet HWI = Hot water inlet

EI = Electrical connection
G = Gas connection

Top

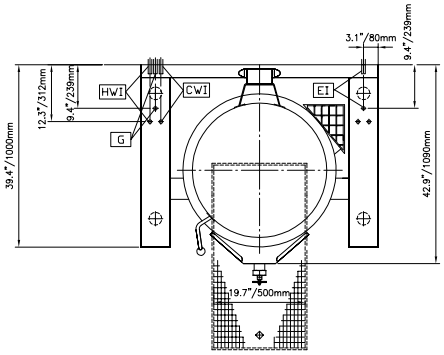

Electric

Supply voltage:	120 V/1 ph/60 Hz
Total Watts:	0.25 kW

Gas

Gas Power:	88712 Btu/hr (26 kW)
Gas Type Option:	Propane
Gas Inlet:	3/4"

Water:

Pressure:	29-87 psi (2-6 bar)

Installation:

Type of installation:	FS on concrete base;FS on feet;On base;Standing against wall

Key Information:

Working Temperature MIN:	122 °F (50 °C)
Working Temperature MAX:	230 °F (110 °C)
External dimensions, Width:	51 3/16" (1300 mm)
External dimensions, Depth:	39 3/8" (1000 mm)
External dimensions, Height:	27 9/16" (700 mm)
Net weight:	595 lbs (270 kg)
Shipping width:	61 1/32" (1550 mm)
Shipping depth:	55 1/8" (1400 mm)
Shipping height:	51 3/16" (1300 mm)
Shipping weight:	944 lbs (428 kg)
Shipping volume:	99.61 ft³ (2.82 m³)
Configuration:	Round;Tilting
Heating type:	Indirect
Tilting mechanism:	Automatic

The company reserves the right to make modifications to the products without prior notice. All information correct at time of printing.

2026.11.20